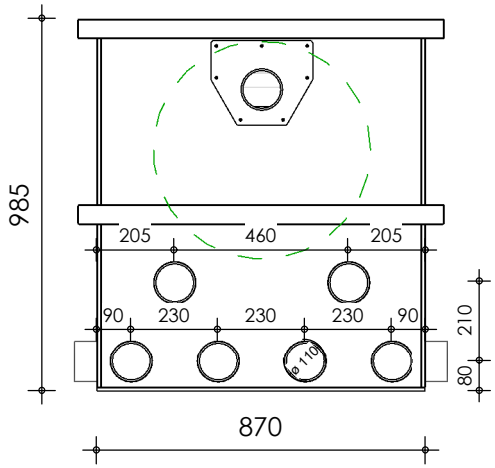

Front view

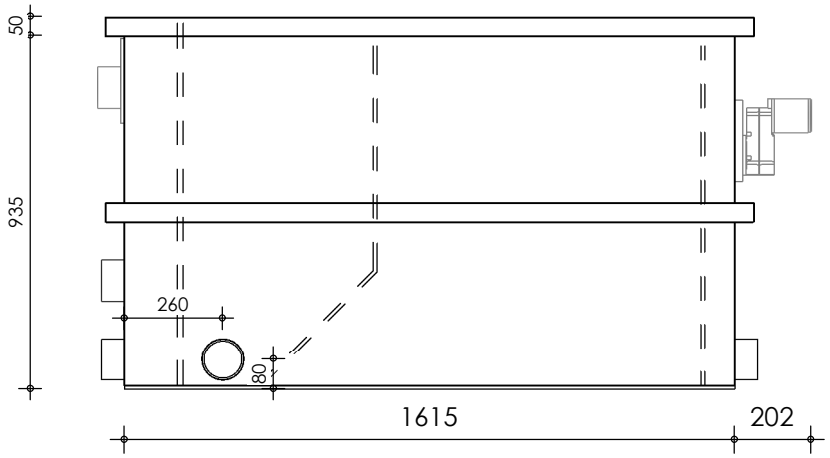

Right-side view

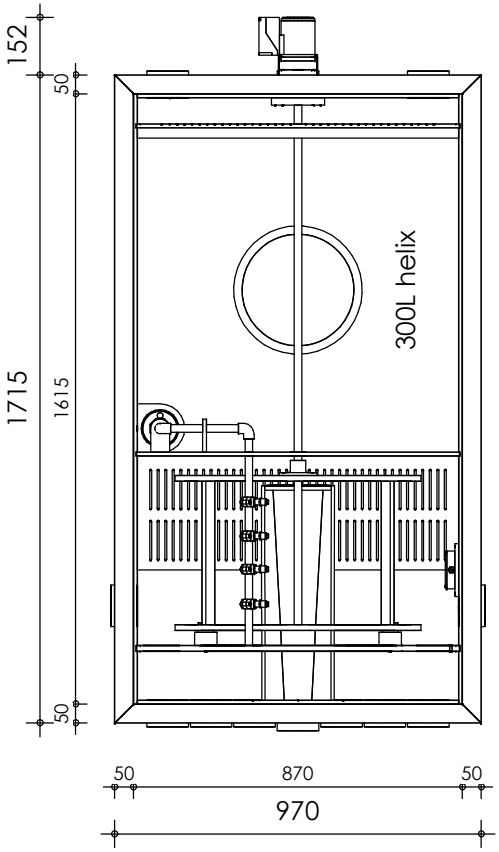

Top view

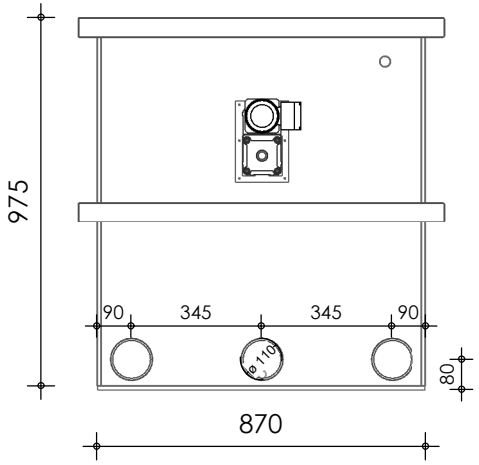

Rear view

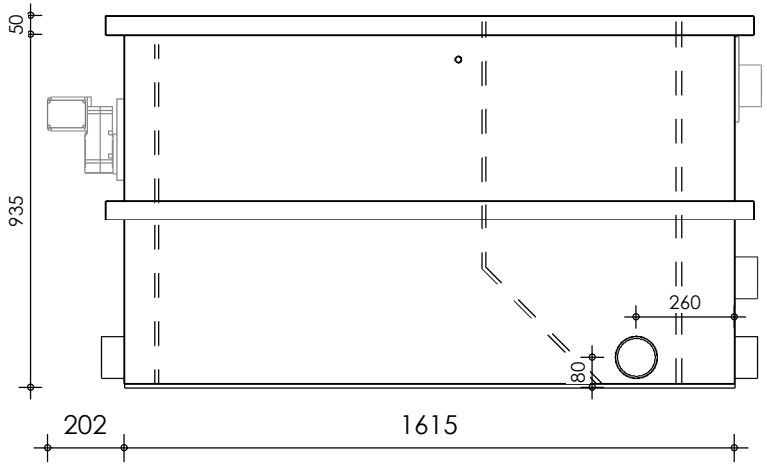

Left-side view

description:	scale :	date :	water running height :
CL50 - combifilter	1 : 20	2019	140 mm

DVS FILTERTECHNIEK